Simulation 3:

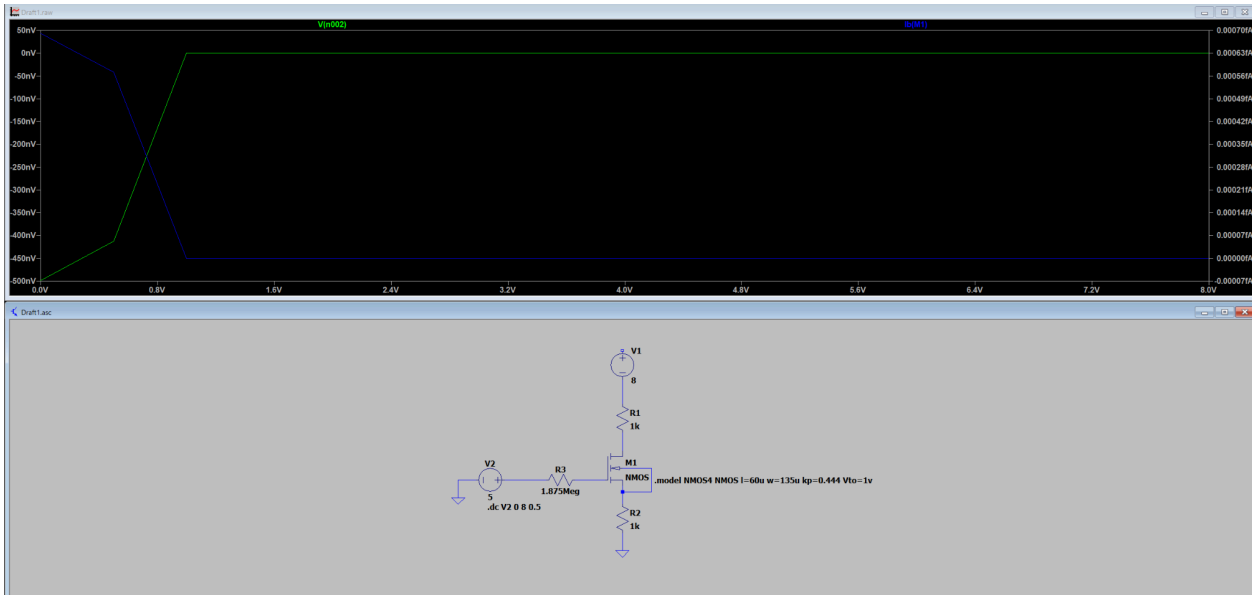

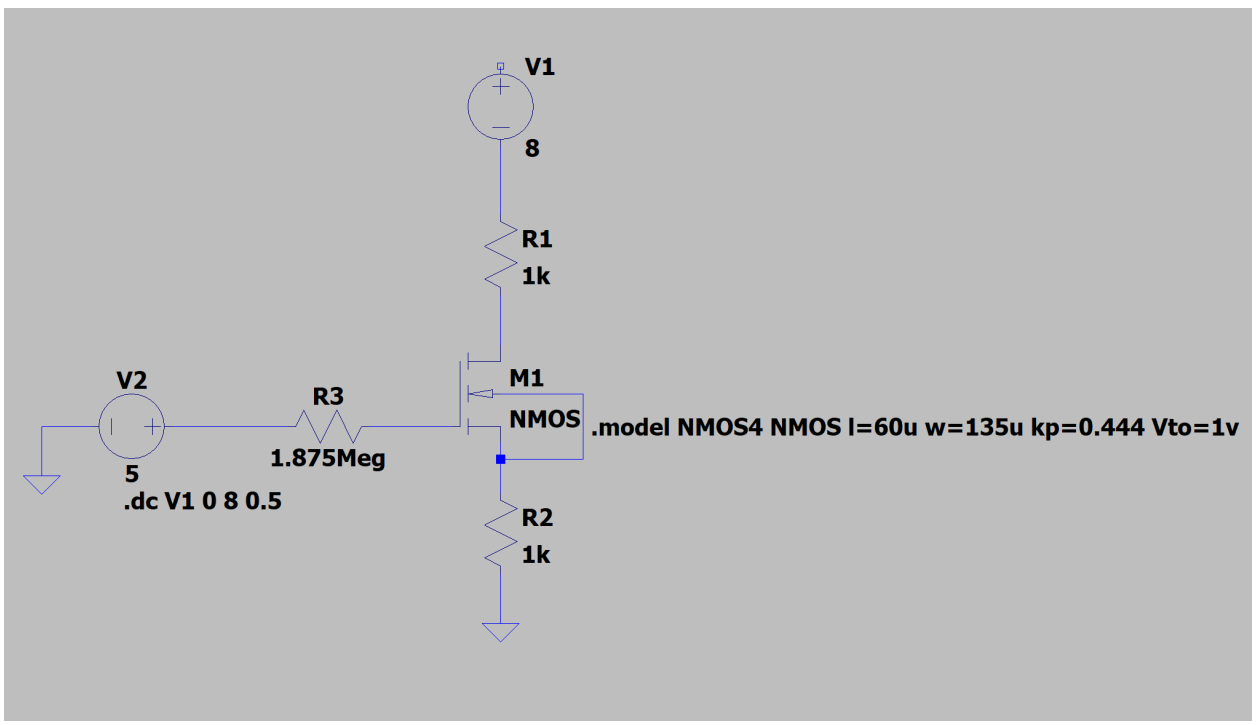

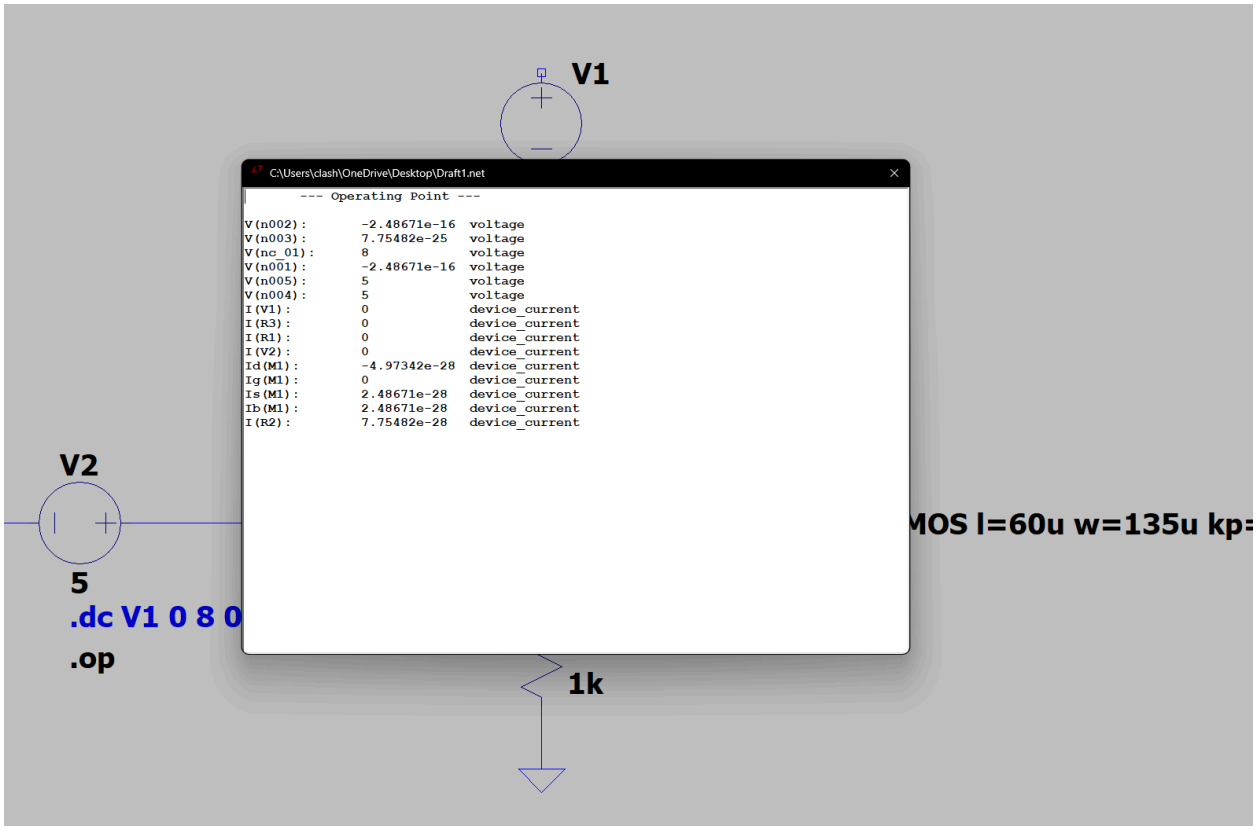

Simulation 4:

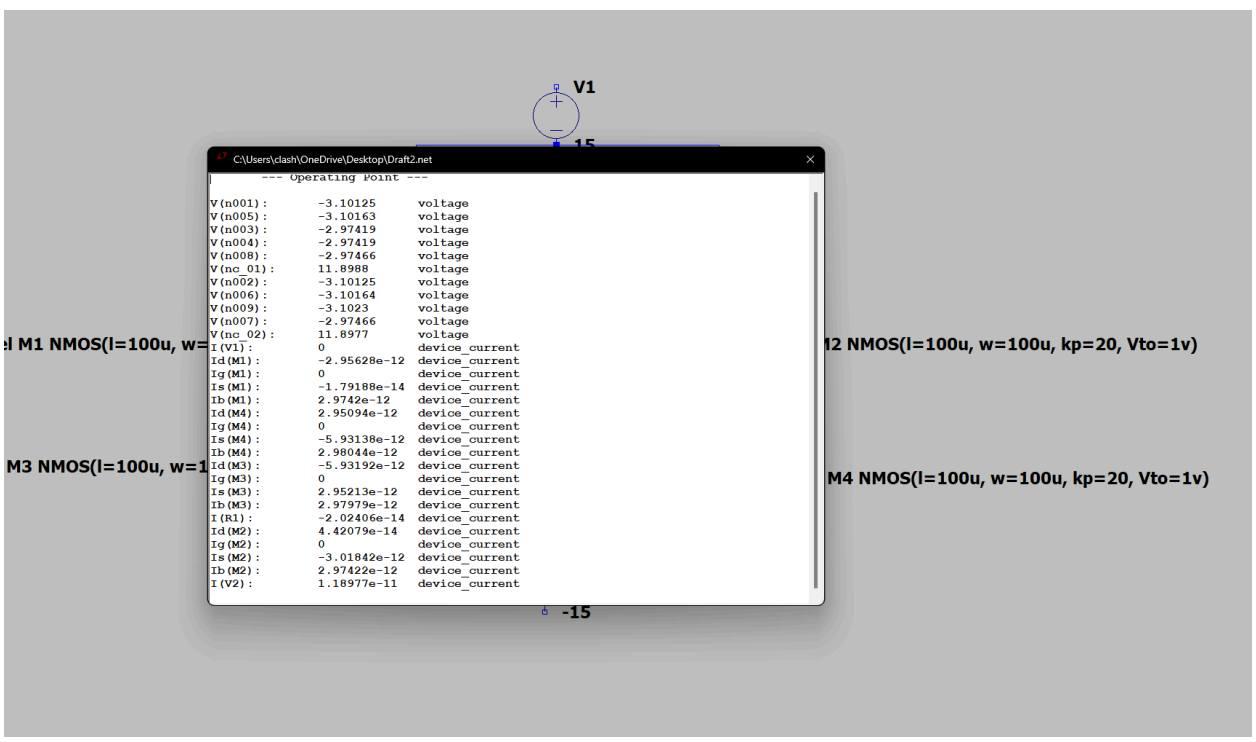

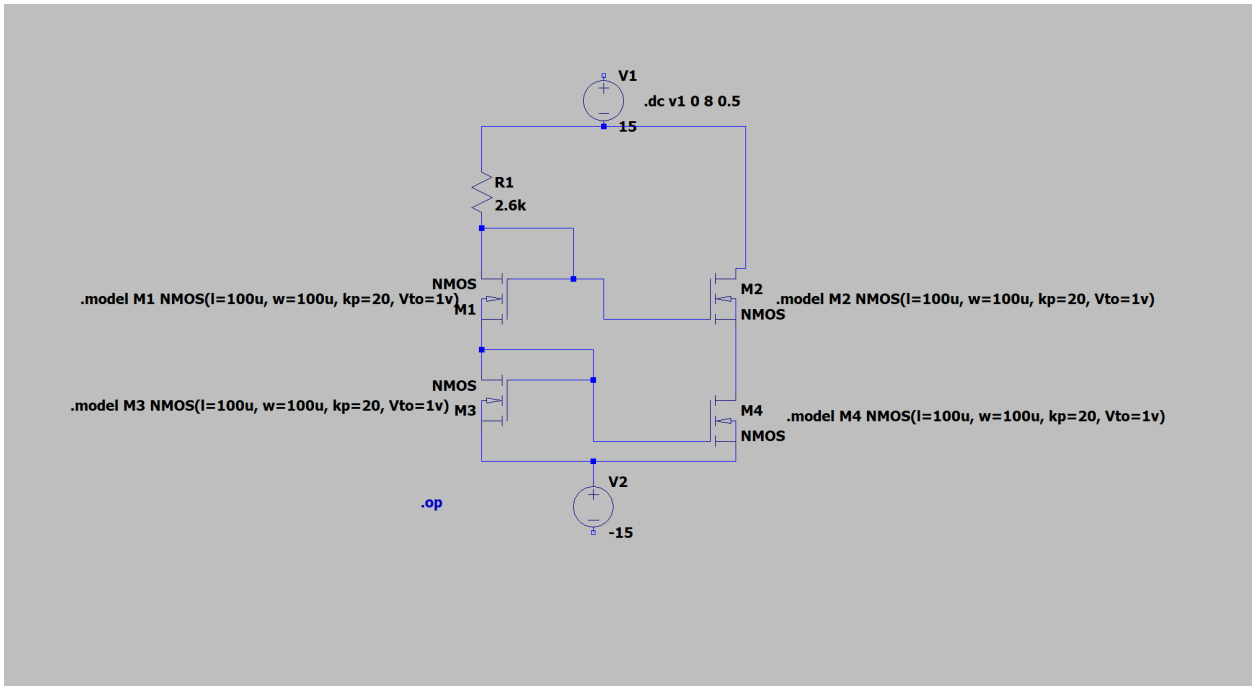
V1
.dc v1 0 8 0.5
15
R1
2.6k
NMOS
.model M1 NMOS(l=100u, w=100u, kp=20, Vto=1v)
M1
M2
.model M2 NMOS(l=100u, w=100u, kp=20, Vto=1v)
NMOS
NMOS
.model M3 NMOS(l=100u, w=100u, kp=20, Vto=1v)
M3
M4
.model M4 NMOS(l=100u, w=100u, kp=20, Vto=1v)
NMOS
V2
.op
-15